STEPPING STONE SCHOOL(HIGH)

Class : 10

Sub : Physics

Chapter : Machines (Part 4)

Date : 29.06.2020

Day :13

Worksheet :13

Topic : Combination of pulleys

<u>Please read the topic mentioned above from your text book and the attached notes. Then work out the exercises neatly with black ink in your big single lined (64pages) note book henceforth. Make the content page with the columns as shown below. Ensure neat and tidy work.</u>

CONTENTS

DATE	WORKSHEET NO.	CHAPTER NO. AND NAME	PAGE NOS.	TEACHER'S SIGNATURE

M.A. , V.R and Efficiency of one fixed pulley and other movable pulleys.

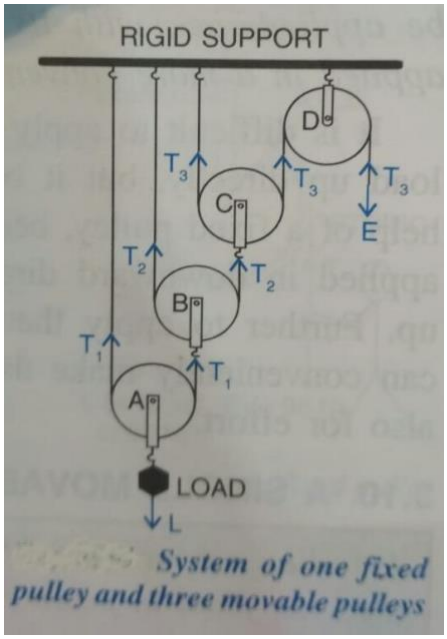

System of one fixed pulley and three movable pulleys

Mechanical Advantage:

Effort E = T_3 - - - - - (i)

The two segments of the string passing over the pulley A supports the load L

Therefore, Tension T, is given by

$$2T_1 = L$$

$$\text{Or, } T_1 = L/2 \quad \text{- - - - -(ii)}$$

Similarly, the two segments of the string passing over the pulley B supports the Tension T_1 . So, Tension T_2 is given by

$$2T_2 = T_1$$

Or $T_2 = T_1/ 2 = L / 2^2$ (from eg. ii) - - -(iii)

Similarly, Tension T_3 in the string passing over the pulley C in given as $2T_3 = T_2$

Or $T_3 = T_2 / 2 = L/2^3$ (from eg. iii) - - -(iv)

From eq (iv)

Load $L = 2^3 \times T_3$

From eq (i) and (iv)

$E = L/2^3$

M.A. = L/E = $L/L/2_3=2_3$

In general, if there are n movable pulleys with one fixed pulley, the mechanical advantage is

M.A. = 2^n

Velocity Ratio

If the load L attached to pulley A moves up a distance 'x' then the string connected to the axle of pulley B moves up by a distance $2x$, the string connected to the axle of pulley C moves up by a distance $2 \times 2x = 2x$ and as such

V.R = distance moved by the effort / distance moved by the load

$2^3x/x = 2^3$

In general, if there are n movable pulleys connected to a fixed pulley, the velocity ratio

V.R.2^n

Efficiency:

Efficiency = M.A / V.R = $2^n / 2^n = 1$ or 100%

Effect of weight of pulleys on M.A, V.R and Efficiency

Let n be the number of pulleys and w be the total weight of the lower block along with the pulleys in it.

E = T and L + w = n T

Or L = n T – w = n E – w

M.A. = L / E

= n E – w / E = n – w / E

The velocity ratio doesn't change, it remains n

V.R = n

Efficiency = M.A. / V.R

= n – w / E / n

= 1- w/ En

For greater efficiency, the pulleys in the lower block should be as light as possible.

Exercise

1) A woman draws water from a well using a fixed pulley. The mass of bucket and water together is 6kg. The force applied by the woman is 70N . Calculate the mechanical advantage (Take g = ms^{-2})
2) A fixed pulley is driven by a 180kg mass falling at a rate of 8.0m in 4.0s. It lifts a load of 75kgf. Calculate
   i) The power input to the pulley taking the force of gravity on 1kg as 10N .
   ii) The efficiency of the pulley.
3) A single fixed pulley and a movable pulley both are separately used to lift a load of 50kgf to the same height. Compare the efforts applied.

4) In a block and tackle system consisting of three pulleys, a load of 75kgf is raised with an effort of 25 kgf. Find i) the mechanical advantage

ii) the velocity ratio

iii)the efficiency.

5) A pulley system has a velocity ratio 3. Draw a diagram showing the point of application and direction of load (L), effort (E) and tension (T). It lifts a load of 150N by an effort of 60N. Calculate its mechanical advantage.

****